CHAPTER 22

Step-Functions

22/1. A variable behaves as a **step-function** over some given period of observation if it changes value at only a finite number of discrete instants, at which it changes value instantaneously. The term 'step-function' will also be used, for convenience, to refer to any physical part whose behaviour is typically of this form.

22/2. An example of a step-function in a system will be given to establish the main properties.

Suppose a mass m hangs downwards suspended on a massless strand of elastic. If the elastic is stretched too far it will break and the mass will fall. Let the elastic pull with a force of k dynes for each centimetre increase from its unstretched length, and, for simplicity, assume that it exerts an opposite force when compressed. Let x, the position of the mass, be measured vertically downwards, taking as zero the position of the elastic when there is no mass.

If the mass is started from a position vertically above or below the point of rest, the movement will be given by the equation

$$\frac{d}{dt}\left(m\frac{dx}{dt}\right) = gm - kx \quad . \quad . \quad . \quad (1)$$

where g is the acceleration due to gravity. This equation is not in canonical form, but may be made so by writing $x = x_1$, $dx/dt = x_2$, when it becomes

$$\left.\begin{aligned} \frac{dx_1}{dt} &= x_2 \\ \frac{dx_2}{dt} &= g - \frac{k}{m}x_1 \end{aligned}\right\} . \quad . \quad . \quad . \quad (2)$$

If the elastic breaks, k becomes 0, and the equations become

$$\left.\begin{aligned}\frac{dx_1}{dt} &= x_2\\ \frac{dx_2}{dt} &= g\end{aligned}\right\} \quad . \quad . \quad . \quad . \quad (3)$$

Assume that the elastic breaks if it is pulled longer than X.

The events may be viewed in two ways, which are equivalent.

We may treat the change of k as a change of parameter to the 2-variable system x_1, x_2, changing their equations from (2) above to (3) (S. 21/1). The field of the 2-variable system will change from A to B in Figure 22/2/1, where the dotted line at X

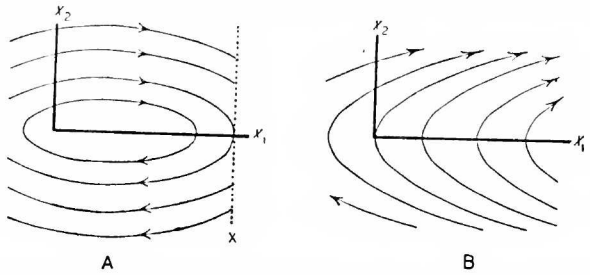

FIGURE 22/2/1 : Two fields of the system (x_1 and x_2) of S. 22/2. With unbroken elastic the system behaves as A, with broken as B. When the strand is stretched to position X it breaks.

shows that the field to its right may not be used (for at X the elastic will break).

Equivalent to this is the view which treats them as a 3-variable system : x_1, x_2, and k. This system is absolute, and has one field, shown in Figure 22/2/2.

In this form, the step-function must be brought into the canonical equations. A possible form is :

$$\frac{dk}{dt} = q\left(\frac{K}{2} + \frac{K}{2}\tanh\{q(X - x_1)\} - k\right) \quad . \quad (4)$$

where K is the initial value of the variable k, and q is large and positive. As $q \rightarrow \infty$, the behaviour of k tends to the step-function form.

Another method is to use Dirac's δ-function, defined by $\delta(u) = 0$ if $u \neq 0$, while if $u = 0$, $\delta(u)$ tends to infinity in such a way that

$$\int_{-\infty}^{\infty} \delta(u)du = 1.$$

Then if $du/dt = \delta\{\phi(u, v, \ldots)\}$, du/dt will be usually zero; but if the changes of $u, v, \ldots$ take ϕ through zero, then $\delta(u)$ becomes momentarily infinite and u will change by a finite jump. These

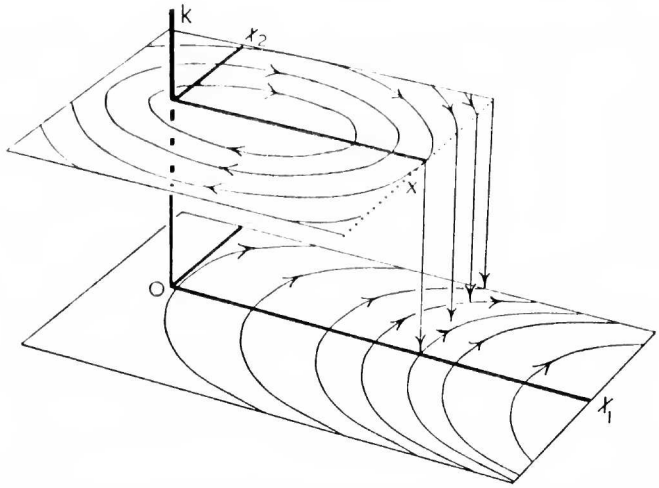

FIGURE 22/2/2: Field of the 3-variable system.

representations are of little practical use, but they are important theoretically in showing that a step-function *can* be represented in the canonical equations.

22/3. In an absolute system, a step-function will change value if, and only if, the system arrives at certain states: the **critical.** In Figure 22/2/2, for instance, all the points in the plane $k = K$ and to the right of the line $x_1 = X$ are critical states for the step-function k when it has the initial value K.

The critical states may, of course, be distributed arbitrarily. More commonly, however, the distribution is continuous. In this case there will be a **critical surface**

$$\phi(k, x_1, \ldots, x_n) = 0$$

which, given k, divides the critical from the non-critical states. In Figure 22/2/2, for instance, the surface intersects the plane $k = K$ at the line $x_1 = X$. (The plane $k = 0$ is not intersected by it, for there are no states in this system whose occurrence will result in k changing from 0.)

Commonly ϕ is a function of only a few of the variables of the

system. Thus, whether a Post Office-type relay opens or shuts depends only on the two variables: the current in the coil, and whether the relay is already open or shut.

Such relays and critical states occur in the homeostat. When two, three or four units are in use, the critical surfaces will form a square, cube, or tesseract respectively in the phase-space around the origin. The critical states will fill the space outside this surface. As there is some 'backlash' in the relays, the critical surfaces for opening are not identical with those for closing.

Systems with multiple fields

22/4. If, in the previous example, someone unknown to us were sometimes to break and sometimes to replace the elastic, and if we were to test the behaviour of the system x_1, x_2 over a prolonged time including many such actions, we would find that the system was often absolute with a field like A of Figure 22/2/1, and often absolute with a field like B; and that from time to time the field changed suddenly from the one form to the other.

Such a system could be said without ambiguity to have two fields. Similarly, if parameters capable of taking r combinations of values were subject to intermittent change by some other, unobserved system, a system might be found to have r fields.

22/5. The argument can, however, be reversed: if we find that a subsystem has r fields we can deduce, subject to certain restrictions, that the other variables must include step-functions.

Theorem: If, within an absolute system $x_1, \ldots, x_n, x_p, \ldots, x_s$, the subsystem $x_1, \ldots, x_n$ is absolute within each of r fields (which persist for a finite time and interchange instantaneously) and is not independent of $x_p, \ldots, x_s$; then one or more of $x_p, \ldots, x_s$ must be step-functions.

Consider the whole system first while one field persists. Take a generic initial state $x_1^0, \ldots, x_n^0, x_p^0, \ldots, x_s^0$ and allow time t_1 to elapse; suppose the representative point moves to $x_1', \ldots, x_n'$, $x_p', \ldots, x_s'$, where each x' is not necessarily different from x^0. Let further time t_2 elapse, the point moving on to $x_1'', \ldots, x_n''$, $x_p'', \ldots, x_s''$. Now consider the line of behaviour that follows the initial state $x_1', \ldots, x_n', x_p^0, x_q', \ldots, x_s'$, differing from the

second point only in the value of x_p: as the subsystem is absolute, an interval t_2 will bring its variables again to $x_1'', \ldots, x_n''$, i.e. these variables' behaviours are the same on the two lines. Now x_p' either is, or is not, equal to x_p^0. If unequal, then by definition (S. 14/3) $x_1, \ldots, x_n$ is independent of x_p. So the behaviour of $x_1, \ldots, x_n$ over t_2 will show either that $x_p' = x_p^0$ (i.e. that x_p did not change over t_1) or that $x_1, \ldots, x_n$ is independent of x_p. Similar tests with the other variables of the set $x_p, \ldots, x_s$ will enable them to be divided into two classes: (1) those that remained constant over t_1, and (2) those of which the subsystem $x_1, \ldots, x_n$ is independent. By hypothesis, class (2) may not include all of $x_p, \ldots, x_s$; so class (1) is not void.

When a field of $x_1, \ldots, x_n$ changes, some parameter to this system must have changed value. As $x_1, \ldots, x_n, x_p, \ldots, x_s$ is isolated, the ' parameter ' can be none other than one or more of $x_p, \ldots, x_s$. As the field has changed, the parameter cannot be in class (2). At the change of field, therefore, at least one of those in class (1) changed value. So class (1), and therefore the set $x_p, \ldots, x_s$, contains at least one step-function.

Reference

Ashby, W. Ross. Principles of the self-organising dynamic system. *Journal of general Psychology*, **37**, 125; 1947.